TECHNOGEAR

PRECISION PLANETARY

TQ Series

Low-backlash Gearboxes

High Performance Precision Planetary Gearboxes

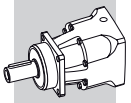

SUMMARY

Revisions

Refer to page 20 for the catalogue revision index.

TQ GEARBOX FEATURES & HIGHLIGHTS

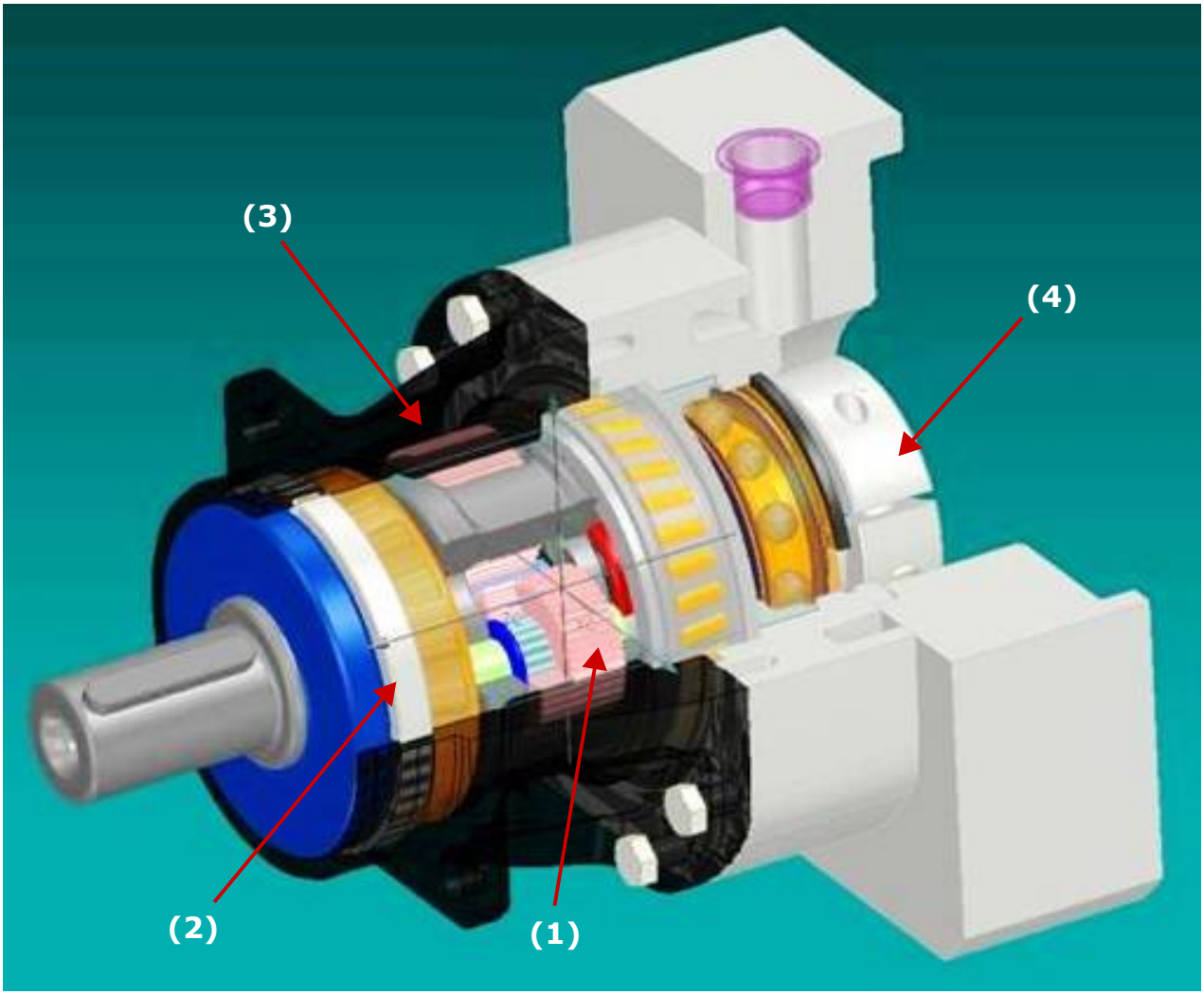

(1) For a two-stage reducer, the input stage is a smaller size - This allows for higher input speeds.
(2) Straddled bearing support of the planetary carrier.
(3) Honing finish - spheroidal Cast Iron housing.
(4) High strength Aluminum clamp.

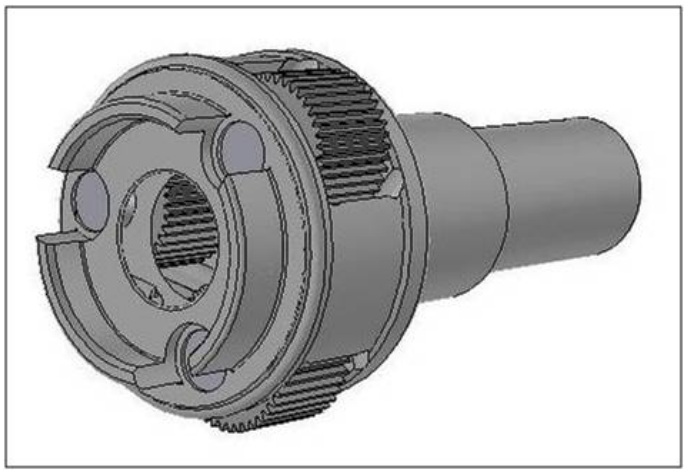

TQ Gearbox Structure

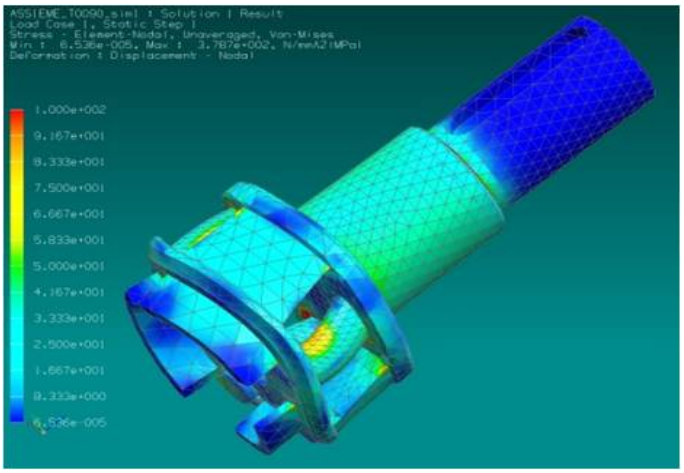

Finite Element Analysis

1 GENERAL INFORMATION

1.1 SYMBOLS, UNITS AND DEFINITIONS

Values depending on the APPLICATION

term	u.m.	definition
A_2	[N]	Axial force on output shaft
$A_{2\ EQU}$	[N]	Equivalent axial force applying on output shaft
$A_{2\ MAX}$	[N]	Maximum axial force applying on output shaft
R_2	[N]	Radial force on output shaft
$R_{2\ EQU}$	[N]	Equivalent radial force applying on output shaft
$R_{2\ MAX}$	[N]	Maximum radial force applying on output shaft
ED	[min]	Duration of the duty
ED%	[%]	Cyclic duration factor
$L_{10h\ TARGET}$	[h]	Output shaft bearings' desired basic rating life
$M_{1\ PEAK}$	[Nm]	Maximum input torque (limited by motor control)
$M_{2(1)}$ ... $M_{2(n)}$	[Nm]	Output torque at the times t_1 ... t_n
$M_{2\ EQU}$	[Nm]	Equivalent output torque
$M_{2\ MAX}$	[Nm]	Maximum output torque in case of emergency
$M_{T2\ EQU}$	[Nm]	Equivalent tilting moment applying on output shaft
$M_{T2\ MAX}$	[Nm]	Maximum tilting moment applying on output shaft
n_1	[min^{-1}]	Nominal input speed
n_2	[min^{-1}]	Output speed
$n_{2(1)}$ ... $n_{2(n)}$	[min^{-1}]	Output speed based on the times t_1 ... t_n
$n_{2\ EQU}$	[min^{-1}]	Equivalent output speed
$n_{2\ MAX}$	[min^{-1}]	Maximum output speed
T	[C°]	Ambient temperature
t_1 ... t_n	[s]	Operating time
t_Σ	[s]	Cycle duration including pause
Z	[1/h]	Number of cycles per hour

Values depending on the GEAR DRIVE SELECTION

term	u.m.	definition
$A_{2\ 3\ max}$	[N]	Admissible axial force on output shaft
$A_2'_{max}$	[N]	Axial force acting simultaneously with radial force
$R_{1\ max}$	[N]	Admissible radial force at midpoint of input shaft
$R_{2\ 3\ max}$	[N]	Admissible radial force at midpoint of output shaft
C_B	[Nm]	Constant for bearing's lifetime calculation
C_t	$\left[\frac{Nm}{arcmin}\right]$	Torsional stiffness
f_n	—	Speed factor
f_z	—	Cycle factor
f_T	—	Temperature adjusting factor
i	—	Gearbox ratio
J_G	[$kgcm^2$]	Mass moment of inertia of the gearhead
K_n	—	Speed constant
L_{10h}	[h]	Bearings basic rating life
L_Z	[mm]	Factor for bearing lifetime calculation
$M_{a\ 2}$	[Nm]	Maximum acceleration output torque
$M_{n\ 2}$	[Nm]	Rated output torque
$M_{p\ 2}$	[Nm]	Emergency stop output torque. Permitted 1000 times during service life of the gearbox
$M_{T2\ max}$	[Nm]	Maximum tilting moment applying on output shaft
$n_{1\ max}$	[min^{-1}]	Maximum momentary input speed. The speed the unit can be driven at occasionally and in non-repetitive conditions For duty type S5, it cannot be applied continuously for more than 30 seconds
p	—	Bearing lifetime exponent
η	[%]	Gear efficiency
φ_R	[arcmin]	Reduced backlash is calculated in static conditions and with the application of a torque equal to 2% of the gear unit rated torque
φ_S	[arcmin]	Standard backlash is calculated in static conditions and with the application of a torque equal to 2% of the gear unit rated torque

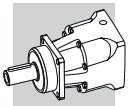

1.2 SELECTING THE GEAR UNIT

(a)	Ratio	i	—	$i = \frac{n_1}{n_2}$
(b)	Equivalent output torque	$M_{2\,EQU}$	[Nm]	$M_{2\,EQU} = \sqrt[3]{\frac{\lvert n_{2(1)}\rvert \cdot t_1 \cdot \lvert M_{2(1)}\rvert^3 + \ldots + \lvert n_{2(n)}\rvert \cdot t_n \cdot \lvert M_{2(n)}\rvert^3}{\lvert n_{2(1)}\rvert \cdot t_1 + \ldots + \lvert n_{2(n)}\rvert \cdot t_n}}$
(c)	Equivalent output speed	$n_{2\,EQU}$	[min^{-1}]	$n_{2\,EQU} = \frac{\lvert n_{2(1)}\rvert \cdot t_1 + \lvert n_{2(2)}\rvert \cdot t_2 + \ldots + \lvert n_{2(n)}\rvert \cdot t_n}{t_\Sigma}$
(d)	Speed factor	f_n	—	If $\frac{K_n}{n_{2\,EQU} \cdot i} \geq 1 \Rightarrow f_n = 1$ If $\frac{K_n}{n_{2\,EQU} \cdot i} < 1 \Rightarrow f_n$ = Obtain from diagram
(e)	Temperature adjusting factor	f_T	—	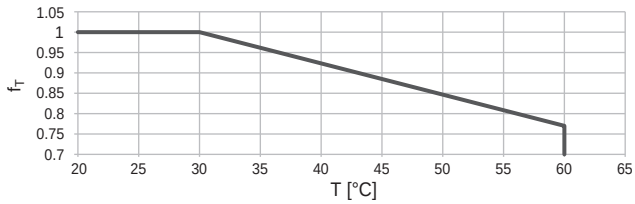
(f)	Cyclic duration factor Duration of the duty	ED% ED	[%] [min]	$ED\% = \frac{t_1 + t_2 + \ldots + t_n}{t_\Sigma} \cdot 100$ $ED = t_1 + t_2 + \ldots + t_n$
(g)	Number of cycles per hour	Z	[1/h]	$Z = \frac{3600}{t_\Sigma}$
(h)	Cycle factor	f_z	—	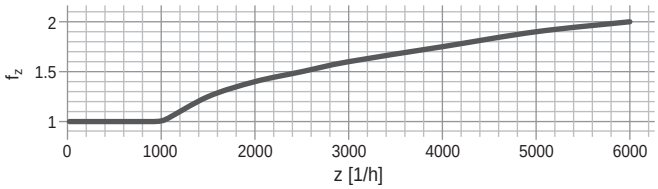
(i)	Maximum input torque	$M_{1\,PEAK}$	[Nm]	a) maximum possible application torque b) limited motor torque by inverter c) maximum motor torque

K_n - speed constant					
i	**TQ 060**	**TQ 070**	**TQ 090**	**TQ 130**	**TQ 160**
3	3500	3100	1050	1800	1100
4	3500	3300	1050	2000	1450
5	3500	3500	1700	2500	1650
7	4000	3500	3000	2500	2500
10	4000	3500	3000	2800	2500
16	4500	3500	3000	2800	2500
20	4500	3500	3000	2800	2500
25	4500	3500	3000	2800	2500
28	4500	3500	3000	2800	2500
35	4500	3500	3000	2800	2500
40	4500	3500	3000	2800	2500
50	4500	3500	3500	3200	2500
70	5000	4500	4000	3500	2500
100	5000	4500	4000	3500	2500

f_n - speed factor

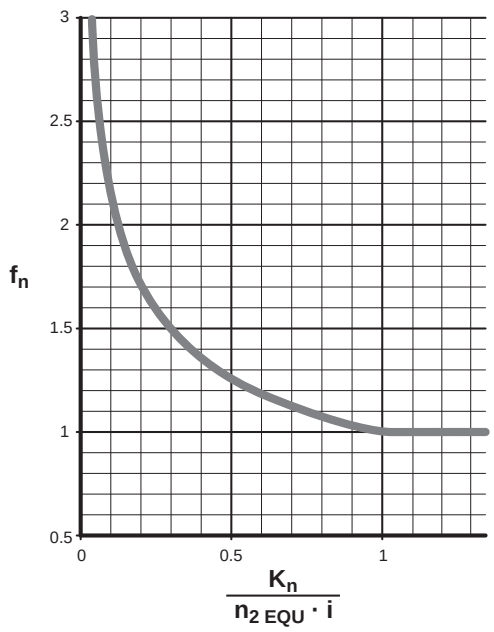

Load diagram

M_2: Output torque

Speed diagram

n_2: Output speed

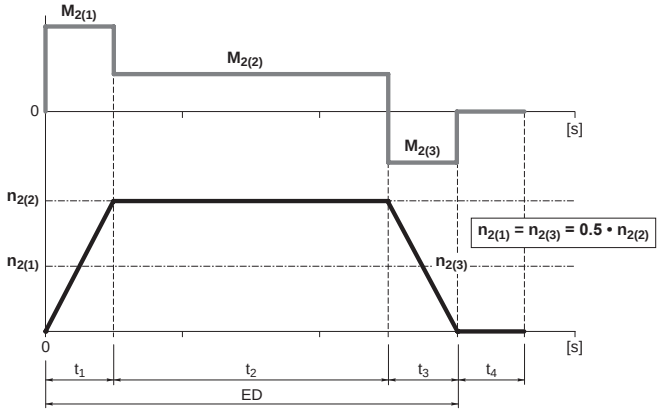

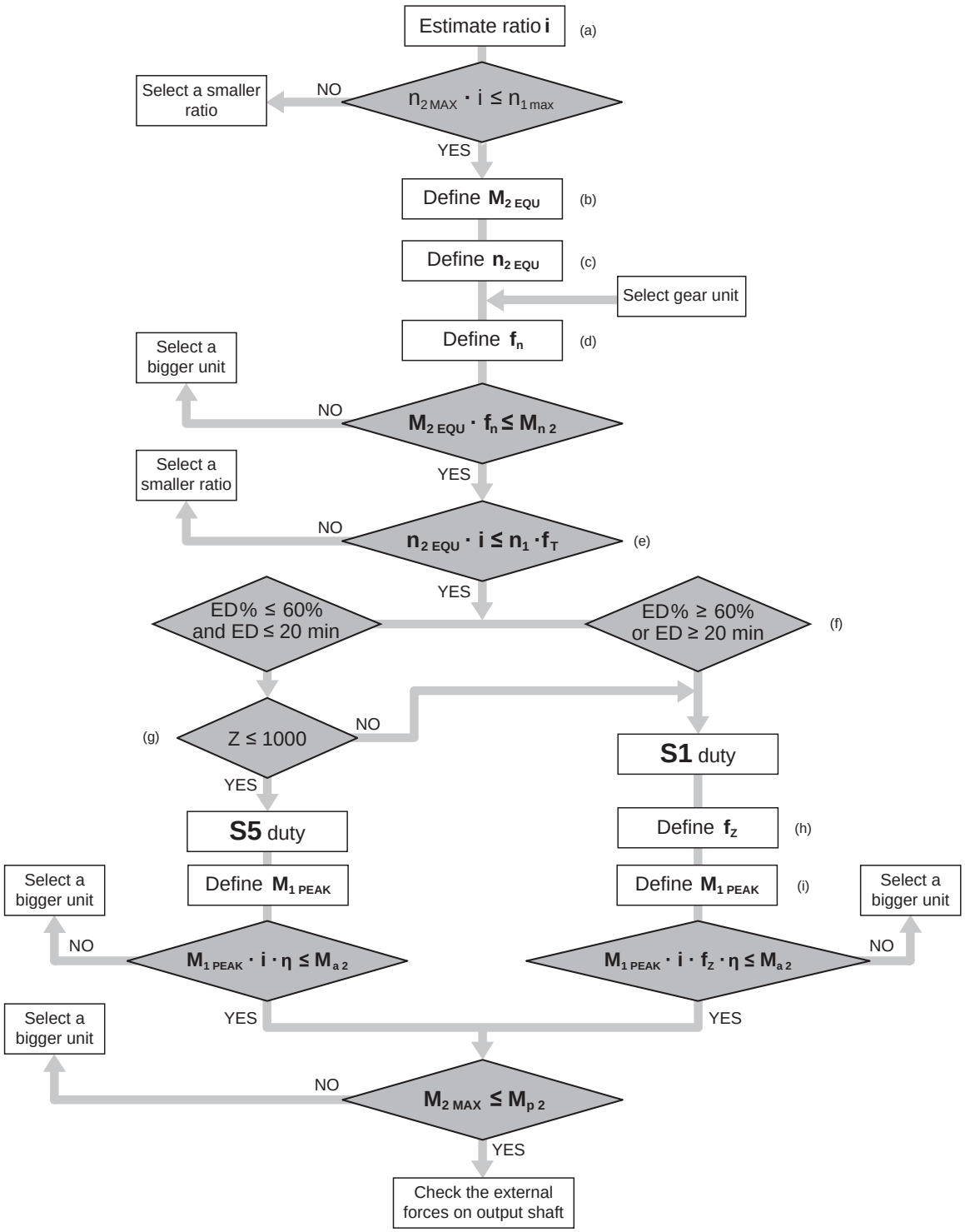

1.3 SERVICE LIFE OF BEARINGS

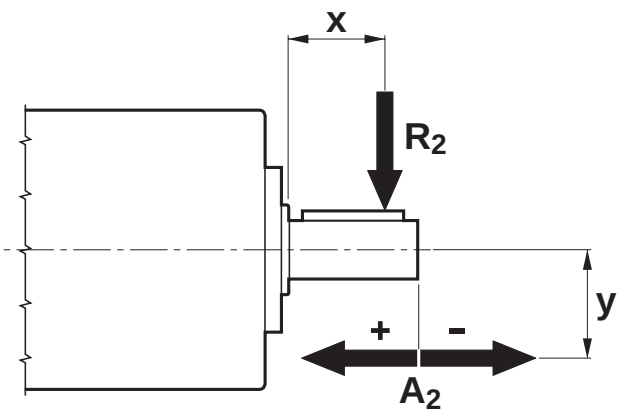

(a)	Maximum radial force applying on output shaft Maximum axial force applying on output shaft	$R_{2\,MAX}$ $A_{2\,MAX}$	[N] [N]	Please consider the specific conditions (e.g. belt drives under acceleration torque)
(b)	Maximum tilting moment applying on output shaft	$M_{T\,2\,MAX}$	[Nm]	$M_{T2\,MAX} = \frac{R_{2\,MAX} \cdot (x + L_Z) \pm A_{2\,MAX} \cdot y}{1000}$
(c)	Equivalent forces applying on output shaft	$R_{2\,EQU}$ $A_{2\,EQU}$	[N] [N]	$R_{2\,EQU} = \sqrt[3]{\frac{\lvert n_{2(1)}\rvert \cdot t_1 \cdot \lvert R_{2(1)}\rvert^3 + \ldots + \lvert n_{2(n)}\rvert \cdot t_n \cdot \lvert R_{2(n)}\rvert^3}{\lvert n_{2(1)}\rvert \cdot t_1 + \ldots + \lvert n_{2(n)}\rvert \cdot t_n}}$ $A_{2\,EQU} = \sqrt[3]{\frac{\lvert n_{2(1)}\rvert \cdot t_1 \cdot \lvert A_{2(1)}\rvert^3 + \ldots + \lvert n_{2(n)}\rvert \cdot t_n \cdot \lvert A_{2(n)}\rvert^3}{\lvert n_{2(1)}\rvert \cdot t_1 + \ldots + \lvert n_{2(n)}\rvert \cdot t_n}}$
(d)	Equivalent tilting moment applying on output shaft	$M_{T\,2\,EQU}$	[Nm]	$M_{T2\,EQU} = \frac{R_{2\,EQU} \cdot (x + L_Z) + A_{2\,EQU} \cdot y}{1000}$
(e)	Equivalent output speed	$n_{2\,EQU}$	[min^{-1}]	$n_{2\,EQU} = \frac{\lvert n_{2(1)}\rvert \cdot t_1 + \lvert n_{2(2)}\rvert \cdot t_2 + \ldots + \lvert n_{2(n)}\rvert \cdot t_n}{t_1 + t_2 + \ldots + t_n}$
(f)	Bearings' basic rating life	L_{10h}	[h]	$L_{10h} = \frac{16666}{n_{2\,EQU}} \cdot \left(\frac{C_B}{M_{T2\,EQU}}\right)^p$

		TQ 060	TQ 070		TQ 090		TQ 130	TQ 160
			SB	HB	SB	HB		
L_Z	[mm]	56	67	64	95	89	96	114
$M_{T\,2\,max}$	[Nm]	129,5	221	343	592	772	1233	2331
C_B	[Nm]	632	1065	1510	2898	3325	6395	9795
p	—	3	3	3.33	3	3.33	3.33	3.33

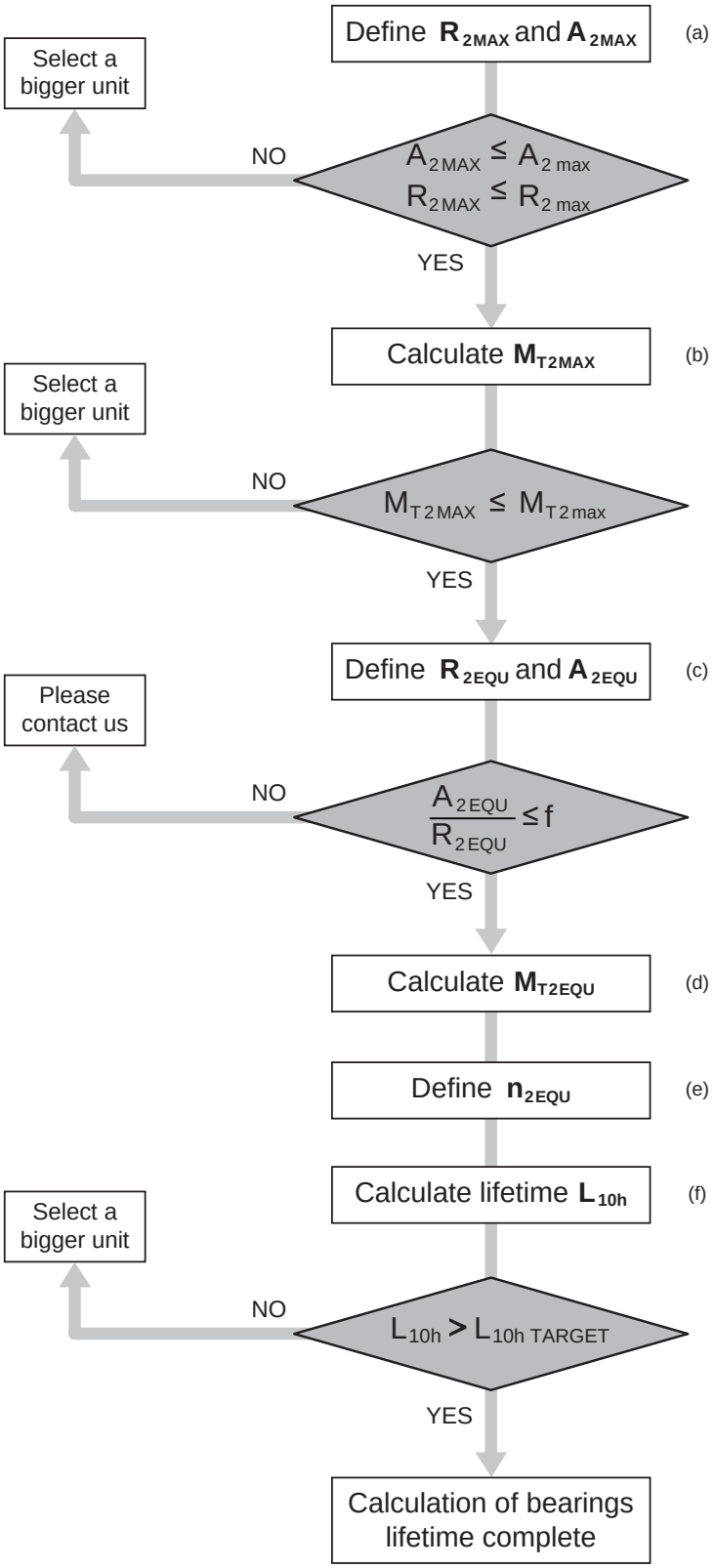

	TQ 060	TQ 070 SB	TQ 070 HB	TQ 090 SB	TQ 090 HB	TQ 130	TQ 160
f	0.26	0.26	0.37	0.26	0.37	0.37	0.37

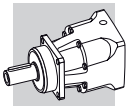

2 FEATURES OF TQ SERIES

Low backlash planetary drives of TQ series combine outstanding performances with a distinctive Italian style which makes them immediately recognizable amongst similar products within the reference industry.
Their design and construction has been developed with the goal of offering consumers a line of products which feature absolute and consistent Quality, which in turn provides a competitive advantage for machines and systems that adopt them as transmission devices.

- TQ drives feature a single class of precision, corresponding to the following values of circumferential backlash
  1-stage units: standard φ_s = 3' (φ_s = 4' for TQ 060 and TQ 070)
  2-stage units: standard φ_s = 5' (φ_s = 6' for TQ 060 and TQ 070)
- A high IP rating (IP65) provides inner parts with protection against the ingress of dust and liquids.
- Input section oil seals made from a Fluoroelastomer compound are supplied as standard.
- Noise pressure level 60 ≤ Lp ≤ 70 dB(A). Conditions: distance 1 m ; measured without load and an input speed of n_1 = 3000 min^{-1}; i = 10.
- Numerous adapters allow matching the most popular brands of servomotors.
- Lubrication optimized for the type of duty specified when ordering.
  In the absence of contamination the lubricant requires no periodical changes.

duty	TQ 060 ... TQ 160	other seals
S1 (continuous)	synthetic oil viscosity ISO VG 220	Fluoroelastomer
S5 (intermittent)	NLGI grease consistency 00	NBR

- Ambient temperature min -20°C, max +30°C. For temperature higher than 30°C please consider derating factor f_T.
- Housing temperature limit must not exceed 90°C.

Distribution of nominal torque M_{n2} [Nm]

[i]	3	4	5	7	10	16	20	25	28	35	40	50	70	100
TQ 060	21	30	30	25	20	30	30	30	30	30	30	30	25	20
TQ 070	45	70	70	60	40	70	70	70	70	70	70	70	60	40
TQ 090	130	200	180	160	110	200	180	180	200	180	200	180	160	110
TQ 130	260	400	400	360	280	400	400	400	400	400	400	400	360	280
TQ 160	530	800	800	750	550	800	800	800	800	800	800	800	750	550

2-stage gearheads

Output shaft max. loading capacity

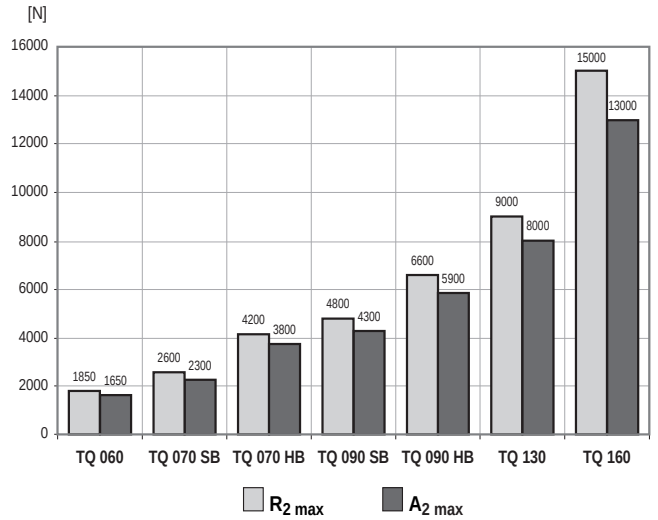

Available motor shaft diameters

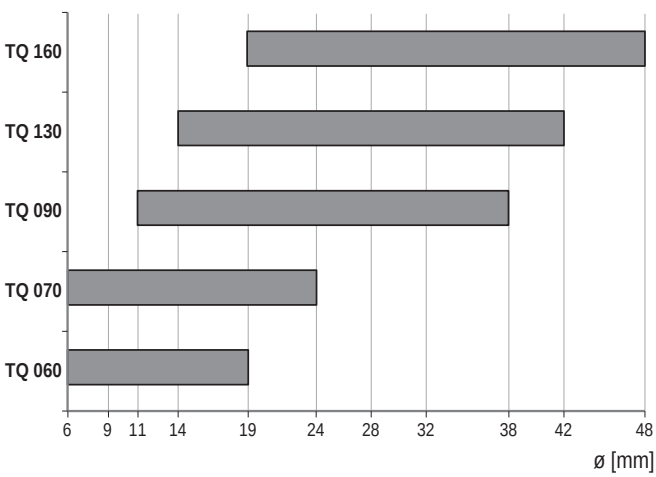

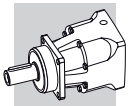

3 ORDERING CODE

TQ 130 1 3 STD 80A3 CD 19 S5 SB KL

OUTPUT SHAFT CONFIGURATION
- **KL** smooth keyless shaft
- **KE** keyed shaft

OUTPUT SHAFT BEARINGS
- **SB** standard
- **HB** reinforced (TQ 070 - TQ 090)

DUTY
- **S1** continuous duty
- **S5** intermittent duty

INPUT SHAFT BORE
- **6 ... 48**

MOTOR COUPLING
- **CD** clamping device

INPUT SECTION
- **30A ... 230A** motor adapter
- **FM** without motor adapter

BACKLASH

	STD (φ_S)		LOW (φ_R)	
	1 reduction	2 reductions	1 reduction	2 reductions
TQ 060	≤ 4'	≤ 6'	≤ 2'	≤ 4'
TQ 070	≤ 4'	≤ 6'	≤ 2'	≤ 4'
TQ 090	≤ 3'	≤ 5'	≤ 2'	≤ 3'
TQ 130	≤ 3'	≤ 5'	≤ 2'	≤ 3'
TQ 160	≤ 3'	≤ 5'	≤ 2'	≤ 3'

GEAR RATIO

REDUCTIONS
- **1** **2**

FRAME SIZE
- **060** **070** **090** **130** **160**

SERIES
- **TQ**

4 DIMENSIONS AND TECHNICAL SPECIFICATIONS

TQ 060 1

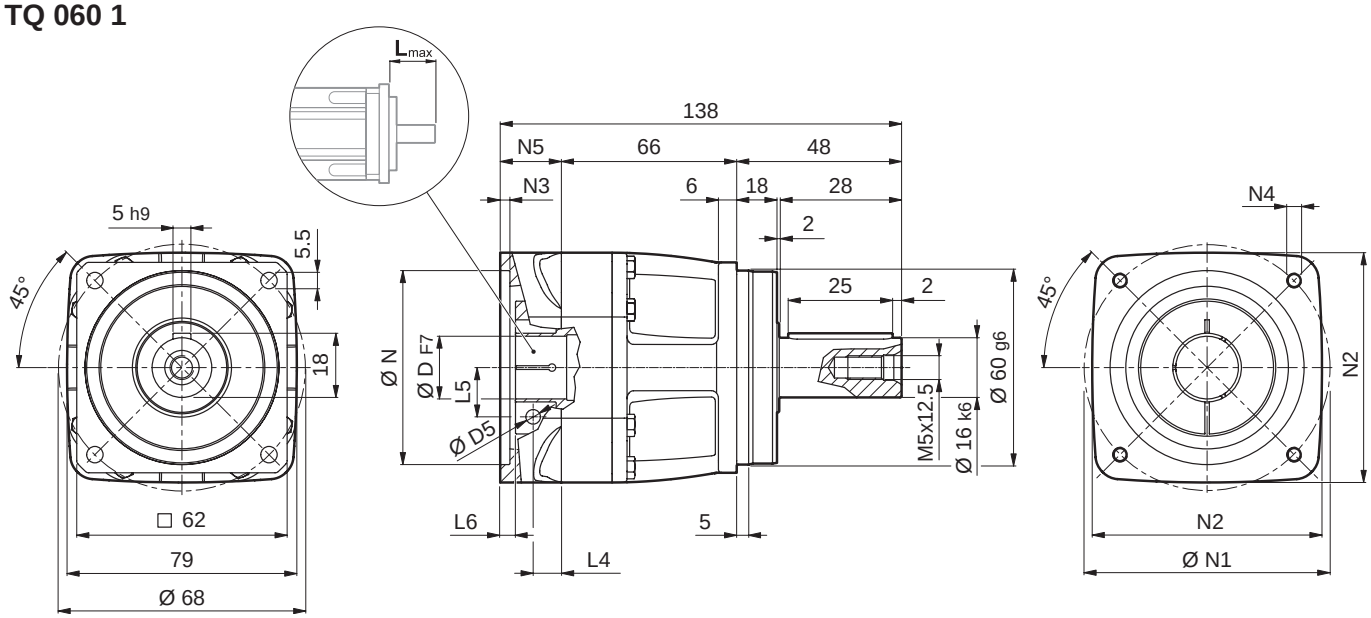

Kg	2.5

	D				
	6	**9**	**11**	**14**	**19**
D5	M4	M5	M6	M6	M6
L4	10.5	11.5	11.5	11.5	11.5
L5	8	10.5	12.5	14.5	16.5
L6	8.5	5	5	5	5

TQ 060 2

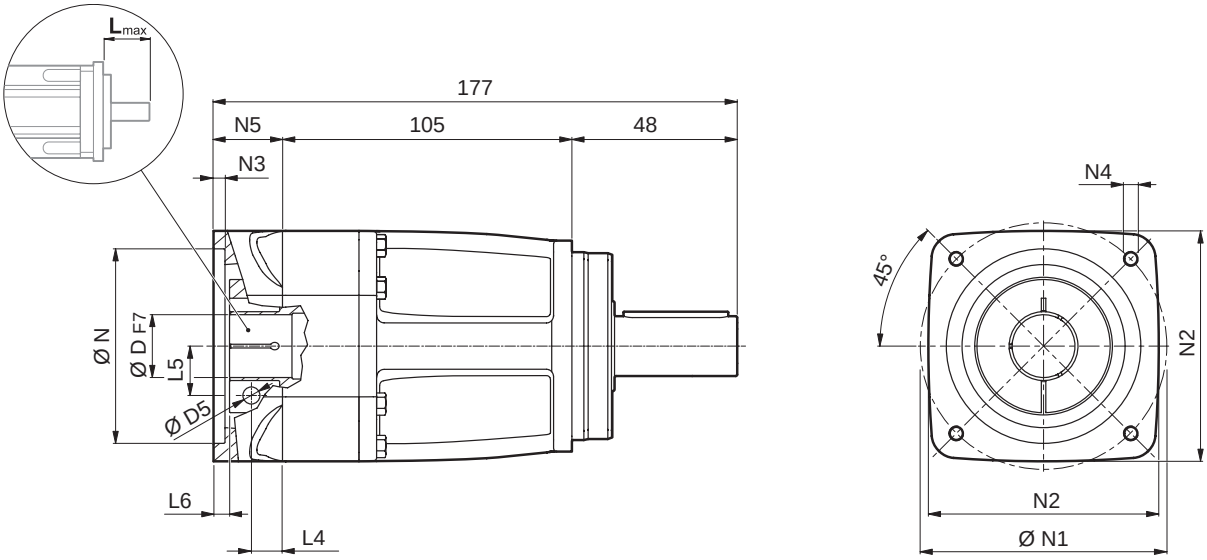

Kg	3.5

	D				
	6	**9**	**11**	**14**	**19**
D5	M4	M5	M6	M6	M6
L4	10.5	11.5	11.5	11.5	11.5
L5	8	10.5	12.5	14.5	16.5
L6	8.5	5	5	5	5

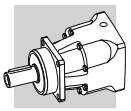

TQ 060 1 – TQ 060 2												
	D					N	N1	N2	N3	N4	N5	L_{max}
30A	6	–	–	–	–	30	46	60	3.5	M4x10	24	40
40B1	–	9	11	14	–	40	63	60	3.5	M4x10	24	40
50A1	–	–	11	–	–	50	60	60	4.0	M4x10	24	40
50C1	–	–	11	14	–	50	70	60	4.0	M4x10	24	40
60A2	–	–	11	14	19	60	75	80	4.0	M5x12	24	40
70B1	–	–	–	14	19	70	90	80	4.0	M5x12	24	40
80A1	–	–	–	14	19	80	100	100	4.0	M6x14	24	40
95A	–	–	–	–	19	95	115	100	4.0	M8x24	24	40
110B0	–	–	–	–	19	110	145	120	4.0	M8x24	24	40

For FM version contact us for overall dimensions.

Please contact us for other motor adapters and input shaft bore!

i	$M_{n\,2}$ [Nm]	$M_{a\,2}$ [Nm]	$M_{p\,2}$ [Nm]	n_1 [min-1]	$n_{1\,max}$ [min-1]	φ_S ≤ [arcmin]	φ_R ≤ [arcmin]	C_t [Nm/arcmin]	$R_{2\,max}$ [N]	$A_{2\,max}$ [N]	η %	J_G [kgcm²] D 6	9	11	14	19
TQ 060 1_3	21	32	60	3500	6000	4'	2'	4.8	1850	1650	97	0.32	0.36	0.40	0.47	0.51
TQ 060 1_4	30	45	80	3200	6000	4'	2'	4.8	1850	1650	97	0.25	0.28	0.33	0.39	0.43
TQ 060 1_5	30	45	80	3500	6000	4'	2'	4.8	1850	1650	97	0.22	0.25	0.30	0.36	0.40
TQ 060 1_7	25	38	70	4000	6000	4'	2'	4.8	1850	1650	97	0.19	0.22	0.27	0.33	0.37
TQ 060 1_10	20	30	55	4000	6000	4'	2'	4.8	1850	1650	97	0.18	0.21	0.26	0.32	0.36
TQ 060 2_16	30	45	80	4500	6000	6'	4'	4.7	1850	1650	94	0.24	0.27	0.32	0.39	0.42
TQ 060 2_20	30	45	80	4500	6000	6'	4'	4.7	1850	1650	94	0.24	0.27	0.32	0.39	0.42
TQ 060 2_25	30	45	80	4500	6000	6'	4'	4.7	1850	1650	94	0.21	0.24	0.29	0.36	0.39
TQ 060 2_28	30	45	80	4500	6000	6'	4'	4.7	1850	1650	94	0.19	0.22	0.27	0.33	0.37
TQ 060 2_35	30	45	80	4500	6000	6'	4'	4.7	1850	1650	94	0.19	0.22	0.27	0.33	0.37
TQ 060 2_40	30	45	80	4500	6000	6'	4'	4.7	1850	1650	94	0.17	0.21	0.25	0.32	0.36
TQ 060 2_50	30	45	80	4500	6000	6'	4'	4.7	1850	1650	94	0.17	0.21	0.25	0.32	0.36
TQ 060 2_70	25	38	70	5000	6000	6'	4'	4.7	1850	1650	94	0.17	0.21	0.25	0.32	0.36
TQ 060 2_100	20	30	55	5000	6000	6'	4'	4.7	1850	1650	94	0.17	0.20	0.25	0.32	0.35

TQ 070 1

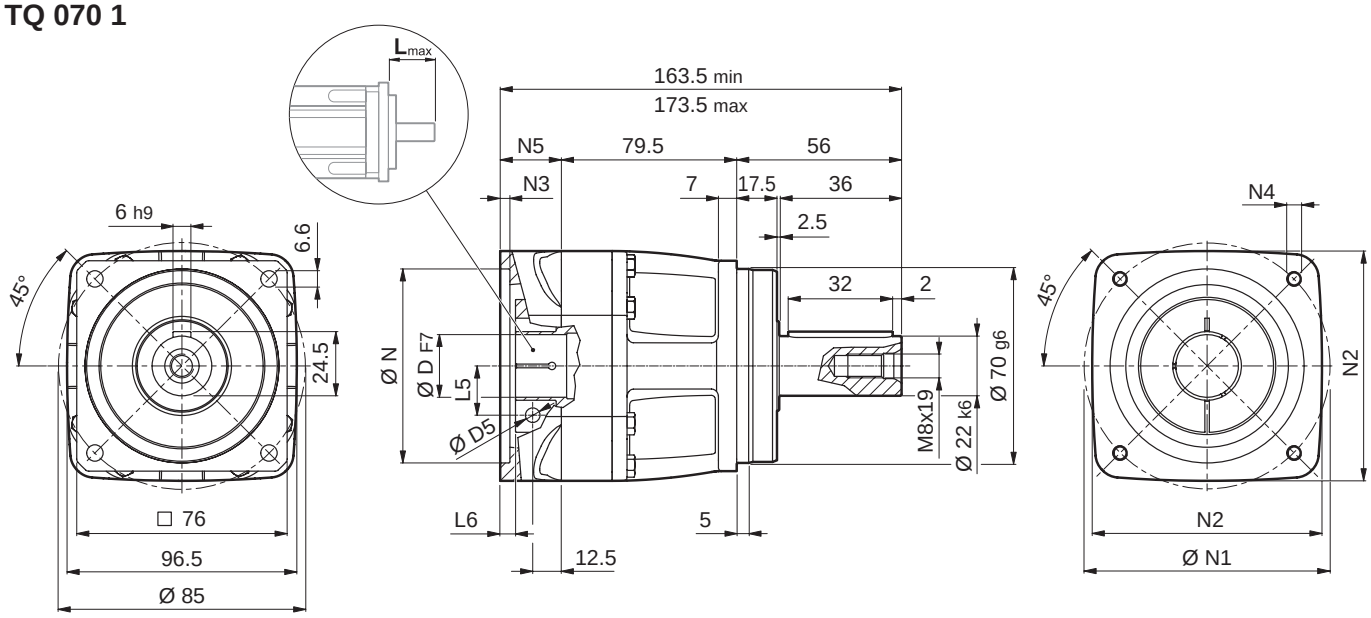

Kg	3.6

		D			
		11	**14**	**19**	**24**
D5		M6	M6	M6	M6
L5		12.5	14.5	16.5	19
L6	min	8	8	8	6.5
	max			18	

TQ 070 2

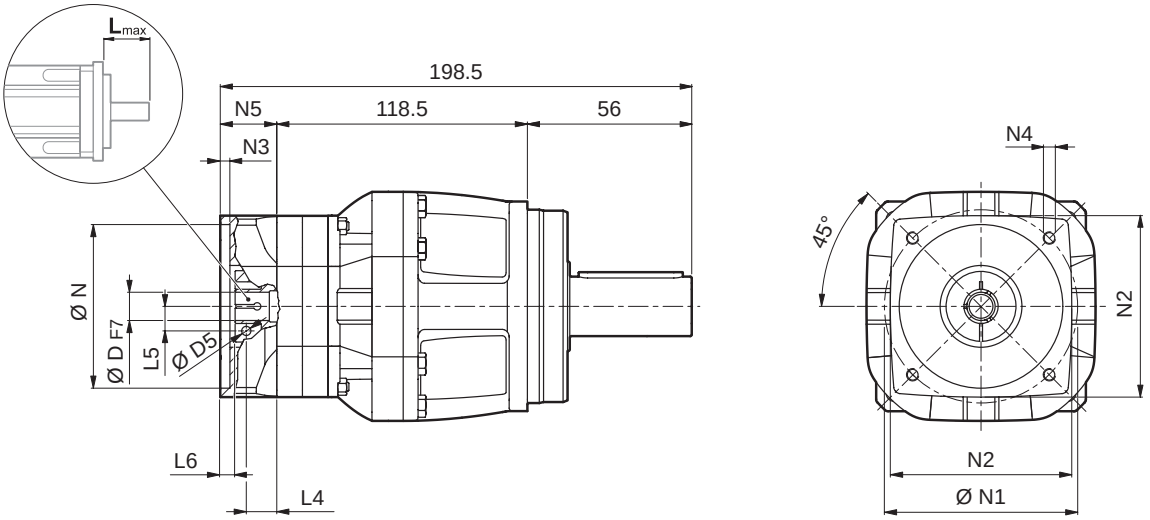

Kg	5.0

	D				
	6	**9**	**11**	**14**	**19**
D5	M4	M5	M6	M6	M6
L4	10.5	11.5	11.5	11.5	11.5
L5	8	10.5	12.5	14.5	16.5
L6	8.5	5	5	5	5

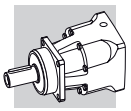

TQ 070 1													
	D						N	N1	N2	N3	N4	N5	L_{max}
50C2	–	–	11	14	–	–	50	70	80	6.5	M4x12	28	50
60A3	–	–	11	14	19	–	60	75	80	6.5	M5x14	28	50
70B2	–	–	–	14	19	–	70	90	80	6.5	M5x14	28	50
80A2	–	–	–	14	19	–	80	100	100	6.5	M6x14	28	50
95A1	–	–	–	–	19	24	95	115	100	6.5	M8x18	28	50
110A1	–	–	–	–	–	24	110	130	120	6.5	M8x18	28	50
110B1	–	–	–	–	19	–	110	145	120	6.5	M8x20	38	60
130A	–	–	–	–	–	24	130	165	140	6.5	M10x19	28	50

TQ 070 2													
	D						N	N1	N2	N3	N4	N5	L_{max}
30A	6	–	–	–	–	–	30	46	60	3.5	M4x10	24	40
40B1	–	9	11	14	–	–	40	63	60	3.5	M4x10	24	40
50A1	–	–	11	–	–	–	50	60	60	4.0	M4x10	24	40
50C1	–	–	11	14	–	–	50	70	60	4.0	M4x10	24	40
60A2	–	–	11	14	19	–	60	75	80	4.0	M5x12	24	40
70B1	–	–	–	14	19	–	70	90	80	4.0	M5x12	24	40
80A1	–	–	–	14	19	–	80	100	100	4.0	M6x14	24	40
95A	–	–	–	–	19	–	95	115	100	4.0	M8x24	24	40
110B0	–	–	–	–	19	–	110	145	120	4.0	M8x24	24	40

For FM version contact us for overall dimensions.

Please contact us for other motor adapters and input shaft bore!

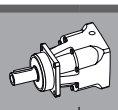 i	M_{n2} [Nm]	M_{a2} [Nm]	M_{p2} [Nm]	n_1 [min⁻¹]	$n_{1\,max}$ [min⁻¹]	φ_S ≤ [arcmin]	φ_R ≤ [arcmin]	C_t [Nm/arcmin]	SB $R_{2\,max}$ [N]	SB $A_{2\,max}$ [N]	HB $R_{2\,max}$ [N]	HB $A_{2\,max}$ [N]	η %	J_G [kgcm²] D 6	9	11	14	19	24
TQ 070 1_3	45	65	120	3000	6000	4'	2'	11.3	2600	2300	4200	3800	97	–	–	0.92	0.99	1.02	1.15
TQ 070 1_4	70	100	180	3000	6000	4'	2'	11.3	2600	2300	4200	3800	97	–	–	0.69	0.76	0.79	0.92
TQ 070 1_5	70	100	180	3000	6000	4'	2'	11.3	2600	2300	4200	3800	97	–	–	0.60	0.67	0.70	0.83
TQ 070 1_7	60	90	160	3500	6000	4'	2'	11.3	2600	2300	4200	3800	97	–	–	0.52	0.59	0.62	0.75
TQ 070 1_10	40	60	110	3500	6000	4'	2'	11.3	2600	2300	4200	3800	97	–	–	0.48	0.55	0.58	0.71
TQ 070 2_16	70	100	180	3500	6000	6'	4'	11.3	2600	2300	4200	3800	94	0.25	0.28	0.33	0.40	0.43	–
TQ 070 2_20	70	100	180	3500	6000	6'	4'	11.3	2600	2300	4200	3800	94	0.25	0.28	0.33	0.39	0.43	–
TQ 070 2_25	70	100	180	3500	6000	6'	4'	11.3	2600	2300	4200	3800	94	0.22	0.25	0.30	0.36	0.40	–
TQ 070 2_28	70	100	180	3500	6000	6'	4'	11.3	2600	2300	4200	3800	94	0.19	0.22	0.27	0.34	0.37	–
TQ 070 2_35	70	100	180	3500	6000	6'	4'	11.3	2600	2300	4200	3800	94	0.19	0.22	0.27	0.34	0.37	–
TQ 070 2_40	70	100	180	3500	6000	6'	4'	11.3	2600	2300	4200	3800	94	0.18	0.21	0.26	0.32	0.36	–
TQ 070 2_50	70	100	180	3500	6000	6'	4'	11.3	2600	2300	4200	3800	94	0.18	0.21	0.26	0.32	0.36	–
TQ 070 2_70	60	90	160	4000	6000	6'	4'	11.3	2600	2300	4200	3800	94	0.17	0.21	0.25	0.32	0.36	–
TQ 070 2_100	40	60	110	4500	6000	6'	4'	11.3	2600	2300	4200	3800	94	0.17	0.21	0.25	0.32	0.36	–

TQ 090 1

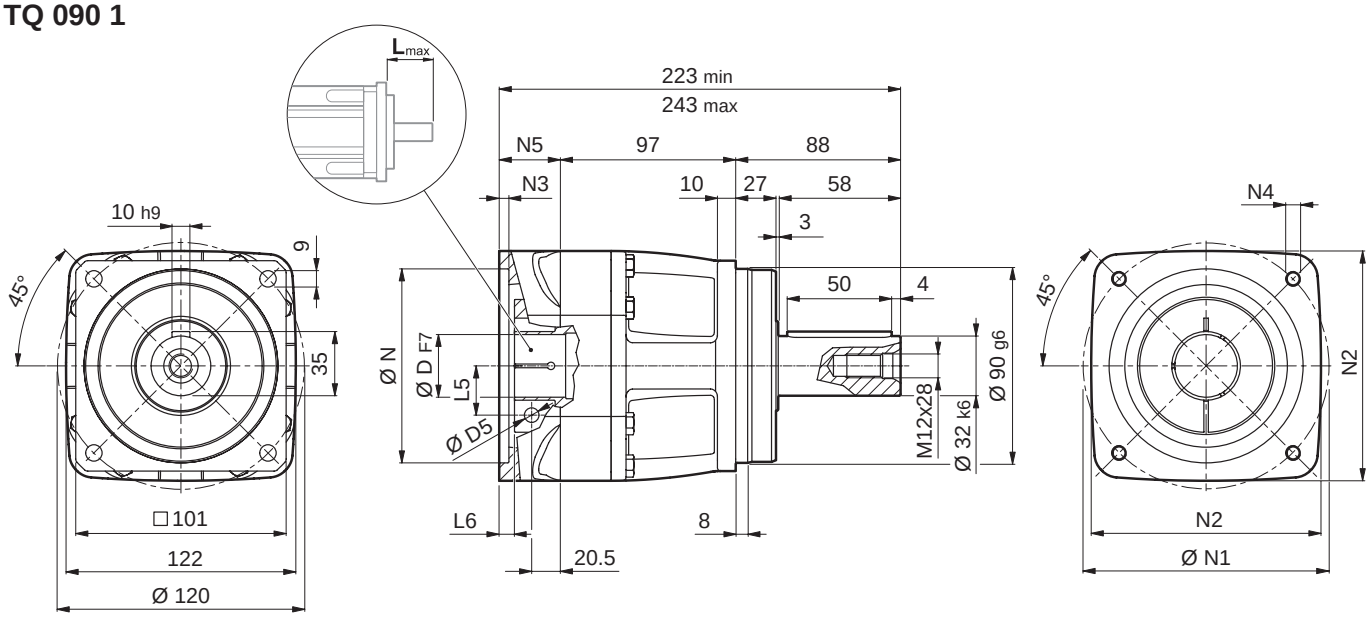

Kg	7.6

		D					
		14	19	24	28	32	38
D5		M6	M6	M6	M8	M8	M8
L5		14.5	16.5	19	22.5	24.5	28
L6	min	10	10	8.5	8.5	8.5	
	max					28.5	26

TQ 090 2

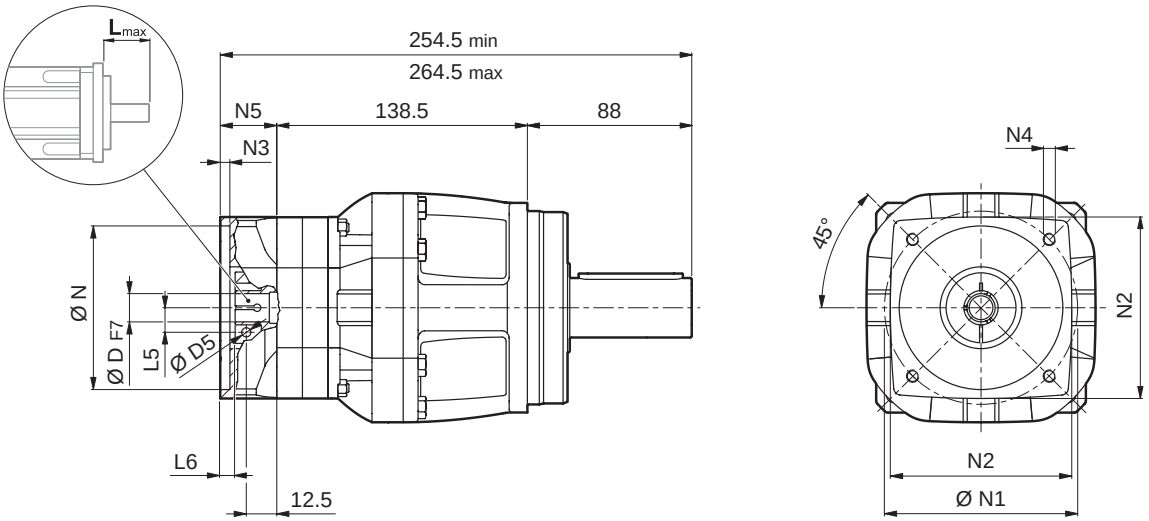

Kg	8.9

		D			
		11	14	19	24
D5		M6	M6	M6	M6
L5		12.5	14.5	16.5	19
L6	min	8	8	8	6.5
	max			18	

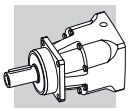

TQ 090 1														
	D							N	N1	N2	N3	N4	N5	L_{max}
60A4	–	14	19	–	–	–	–	60	75	100	6.5	M5x14	38	60
80A3	–	14	19	–	–	–	–	80	100	100	6.5	M6x14	38	60
95A2	–	–	19	24	28	–	–	95	115	100	6.5	M8x18	38	60
110A2	–	–	–	24	–	–	–	110	130	122	6.5	M8x20	38	60
110B1	–	–	19	–	28	–	–	110	145	122	6.5	M8x20	38	60
130A1	–	–	–	24	28	32	–	130	165	140	6.5	M10x20	38	60
180A	–	–	–	24	28	–	–	180	215	190	6.5	M14x38	38	60
180A1	–	–	–	–	–	32	38	180	215	190	6.5	M14x28	58	80

TQ 090 2														
	D							N	N1	N2	N3	N4	N5	L_{max}
50C2	11	14	–	–	–	–	–	50	70	80	6.5	M4x12	28	50
60A3	11	14	19	–	–	–	–	60	75	80	6.5	M5x14	28	50
70B2	–	14	19	–	–	–	–	70	90	80	6.5	M5x14	28	50
80A2	–	14	19	–	–	–	–	80	100	100	6.5	M6x14	28	50
95A1	–	–	19	24	–	–	–	95	115	100	6.5	M8x18	28	50
110A1	–	–	–	24	–	–	–	110	130	120	6.5	M8x18	28	50
110B1	–	–	19	–	–	–	–	110	145	120	6.5	M8x20	38	60
130A	–	–	–	24	–	–	–	130	165	140	6.5	M10x19	28	50

For FM version contact us for overall dimensions.

Please contact us for other motor adapters and input shaft bore!

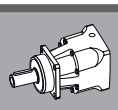 i	$M_{n\,2}$ [Nm]	$M_{a\,2}$ [Nm]	$M_{p\,2}$ [Nm]	n_1 [min⁻¹]	$n_{1\,max}$ [min⁻¹]	φ_S ≤ [arcmin]	φ_R ≤ [arcmin]	C_t [Nm/arcmin]	SB $R_{2\,max}$ [N]	SB $A_{2\,max}$ [N]	HB $R_{2\,max}$ [N]	HB $A_{2\,max}$ [N]	η %	J_G [kgcm²] D 11	14	19	24	28	32	38
TQ 090 1_3	130	200	400	2500	4500	3'	2'	28	4800	4300	6600	5900	97	–	2.15	2.18	2.30	2.69	3.97	4.48
TQ 090 1_4	200	300	500	2500	4500	3'	2'	28	4800	4300	6600	5900	97	–	1.60	1.63	1.75	2.14	3.42	3.93
TQ 090 1_5	180	280	500	2500	4500	3'	2'	28	4800	4300	6600	5900	97	–	1.36	1.39	1.52	1.90	3.18	3.70
TQ 090 1_7	160	250	500	3000	4500	3'	2'	28	4800	4300	6600	5900	97	–	1.16	1.19	1.32	1.70	2.98	3.50
TQ 090 1_10	110	170	350	3000	4500	3'	2'	28	4800	4300	6600	5900	97	–	1.05	1.08	1.21	1.59	2.87	3.39
TQ 090 2_16	200	300	500	3000	4500	5'	3'	28	4800	4300	6600	5900	94	0.70	0.77	0.80	0.94	–	–	–
TQ 090 2_20	180	280	500	3000	4500	5'	3'	28	4800	4300	6600	5900	94	0.69	0.76	0.79	0.92	–	–	–
TQ 090 2_25	180	280	500	3000	4500	5'	3'	28	4800	4300	6600	5900	94	0.60	0.67	0.70	0.83	–	–	–
TQ 090 2_28	200	300	500	3000	4500	5'	3'	28	4800	4300	6600	5900	94	0.53	0.60	0.63	0.76	–	–	–
TQ 090 2_35	180	280	500	3000	4500	5'	3'	28	4800	4300	6600	5900	94	0.52	0.59	0.62	0.75	–	–	–
TQ 090 2_40	200	300	500	3000	4500	5'	3'	28	4800	4300	6600	5900	94	0.48	0.55	0.58	0.71	–	–	–
TQ 090 2_50	180	280	500	3500	4500	5'	3'	28	4800	4300	6600	5900	94	0.48	0.55	0.58	0.71	–	–	–
TQ 090 2_70	160	250	500	4000	4500	5'	3'	28	4800	4300	6600	5900	94	0.48	0.55	0.58	0.71	–	–	–
TQ 090 2_100	110	170	350	4000	4500	5'	3'	28	4800	4300	6600	5900	94	0.48	0.55	0.58	0.71	–	–	–

TQ 130 1

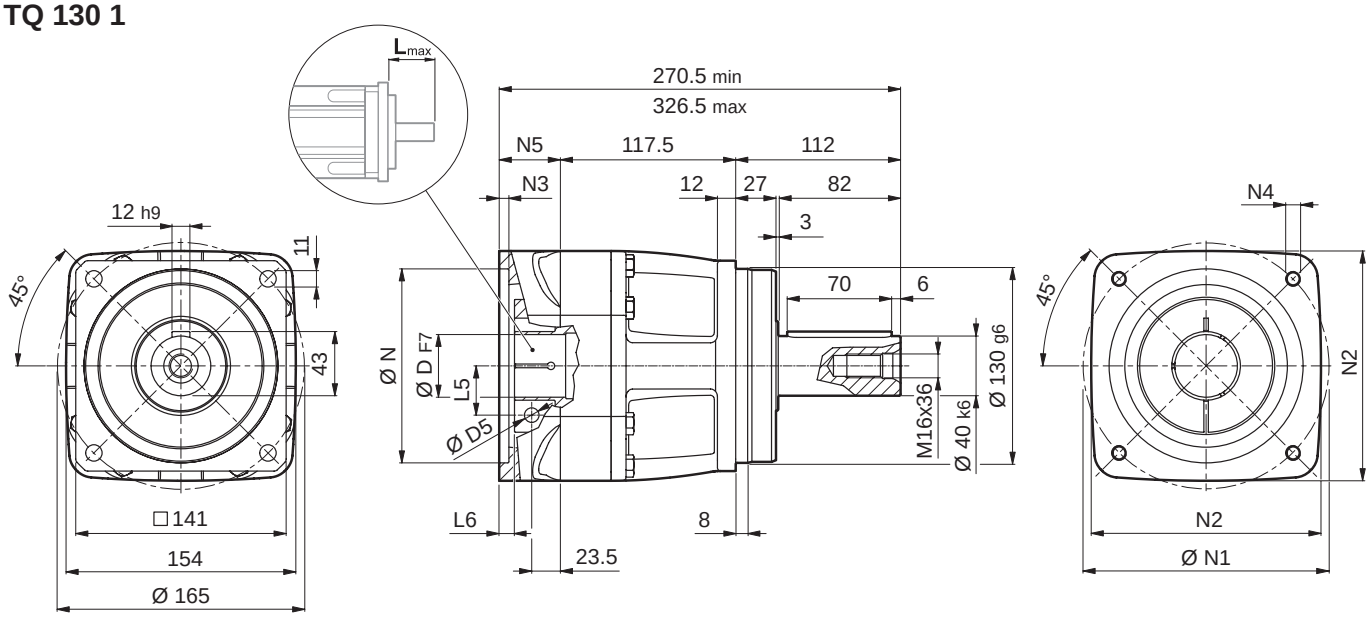

Kg	15.6

		D					
		19	24	28	32	38	42
D5		M6	M6	M8	M8	M8	M10
L5		16.5	19	22.5	24.5	28	33
L6	min	10	8.5	8.5	8.5		
	max				28.5	26	58.5

TQ 130 2

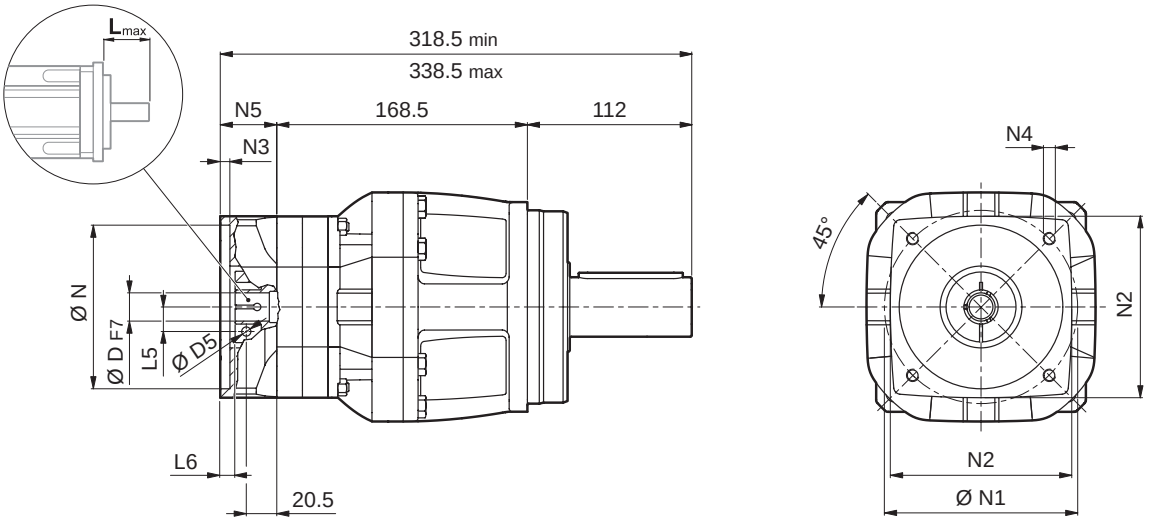

Kg	19.1

		D					
		14	19	24	28	32	38
D5		M6	M6	M6	M8	M8	M8
L5		14.5	16.5	19	22.5	24.5	28
L6	min	10	10	8.5	8.5	8.5	
	max					28.5	26

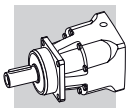

TQ 130 1														
	D							N	N1	N2	N3	N4	N5	L_{max}
80A3	–	19	–	–	–	–	–	80	100	130	6.5	M6x14	41	60
95A2	–	19	24	28	–	–	–	95	115	130	6.5	M8x18	41	60
110A2	–	–	24	–	–	–	–	110	130	130	6.5	M8x20	41	60
110B1	–	19	–	28	–	–	–	110	145	130	6.5	M8x20	41	60
130A1	–	–	24	28	32	–	–	130	165	154	6.5	M10x20	41	60
180A	–	–	24	28	–	–	–	180	215	190	6.5	M14x28	41	60
180A1	–	–	–	–	32	38	–	180	215	190	6.5	M14x28	61	80
200A	–	–	–	–	–	–	42	200	235	210	6.5	M14x28	97	110

TQ 130 2														
	D							N	N1	N2	N3	N4	N5	L_{max}
60A4	14	19	–	–	–	–	–	60	75	100	6.5	M5x14	38	60
80A3	14	19	–	–	–	–	–	80	100	100	6.5	M6x14	38	60
95A2	–	19	24	28	–	–	–	95	115	100	6.5	M8x18	38	60
110A2	–	–	24	–	–	–	–	110	130	122	6.5	M8x20	38	60
110B1	–	19	–	28	–	–	–	110	145	122	6.5	M8x20	38	60
130A1	–	–	24	28	32	–	–	130	165	140	6.5	M10x20	38	60
180A	–	–	24	28	–	–	–	180	215	190	6.5	M14x38	38	60
180A1	–	–	–	–	32	38	–	180	215	190	6.5	M14x28	58	80

For FM version contact us for overall dimensions.

Please contact us for other motor adapters and input shaft bore!

	i	$M_{n\,2}$ [Nm]	$M_{a\,2}$ [Nm]	$M_{p\,2}$ [Nm]	n_1 [min-1]	$n_{1\,max}$ [min-1]	φ_S ≤ [arcmin]	φ_R ≤ [arcmin]	C_t [Nm/arcmin]	$R_{2\,max}$ [N]	$A_{2\,max}$ [N]	η %	J_G [kgcm²] D 14	19	24	28	32	38	42
TQ 130 1_3		260	400	900	2100	4000	3'	2'	59	9000	8000	97	–	9.87	10.02	10.40	10.48	11.12	17.12
TQ 130 1_4		400	600	1000	2100	4000	3'	2'	59	9000	8000	97	–	6.24	6.38	6.77	6.85	7.49	13.49
TQ 130 1_5		400	600	1000	2500	4000	3'	2'	59	9000	8000	97	–	4.86	5.01	5.39	5.47	6.11	12.11
TQ 130 1_7		360	550	950	2500	4000	3'	2'	59	9000	8000	97	–	3.68	3.82	4.20	4.28	4.93	10.93
TQ 130 1_10		280	420	900	2500	4000	3'	2'	59	9000	8000	97	–	3.00	3.15	3.53	3.61	4.25	10.25
TQ 130 2_16		400	600	1000	2800	4000	5'	3'	58	9000	8000	94	1.72	1.75	1.87	2.26	3.53	4.05	–
TQ 130 2_20		400	600	1000	2800	4000	5'	3'	58	9000	8000	94	1.64	1.67	1.80	2.18	3.46	3.98	–
TQ 130 2_25		400	600	1000	2800	4000	5'	3'	58	9000	8000	94	1.39	1.42	1.55	1.93	3.21	3.73	–
TQ 130 2_28		400	600	1000	2800	4000	5'	3'	58	9000	8000	94	1.20	1.23	1.36	1.74	3.02	3.54	–
TQ 130 2_35		400	600	1000	2800	4000	5'	3'	58	9000	8000	94	1.17	1.20	1.33	1.71	2.99	3.51	–
TQ 130 2_40		400	600	1000	3200	4000	5'	3'	58	9000	8000	94	1.07	1.10	1.23	1.61	2.89	3.41	–
TQ 130 2_50		400	600	1000	3200	4000	5'	3'	58	9000	8000	94	1.06	1.09	1.21	1.60	2.87	3.39	–
TQ 130 2_70		360	550	950	3500	4000	5'	3'	58	9000	8000	94	1.05	1.08	1.20	1.59	2.86	3.38	–
TQ 130 2_100		280	420	900	4000	4000	5'	3'	58	9000	8000	94	1.04	1.07	1.20	1.58	2.86	3.38	–

TQ 160 1

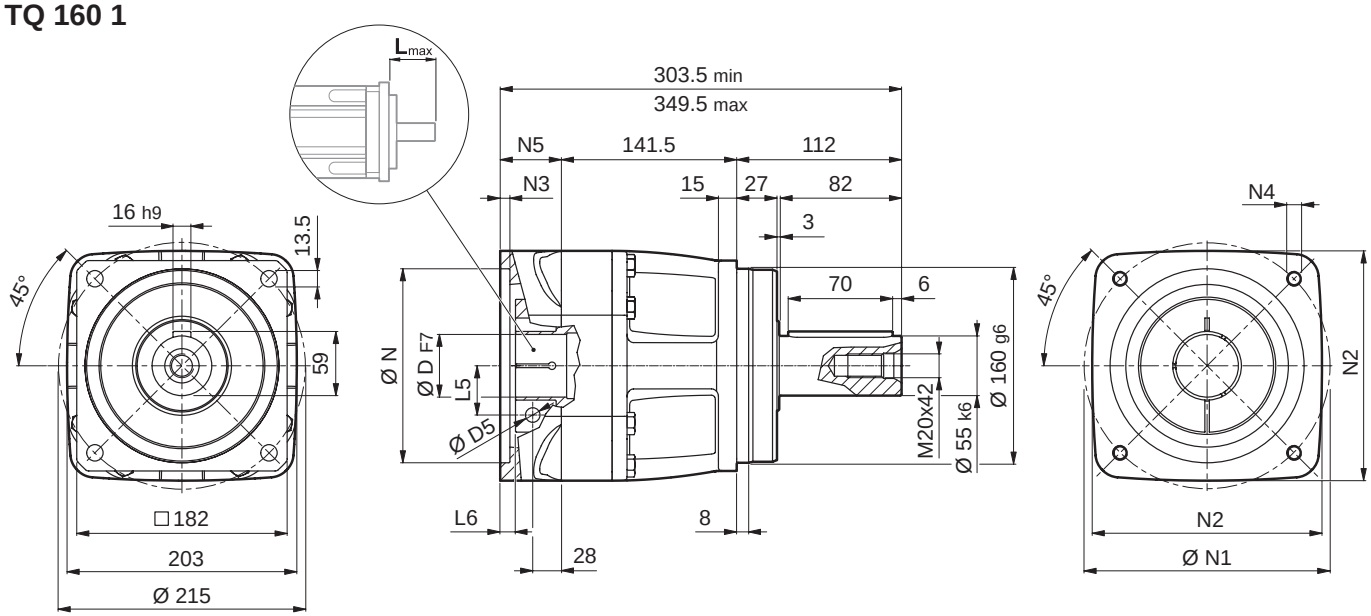

Kg	29.7

		D					
		24	**28**	**32**	**38**	**42**	**48**
D5		M6	M8	M8	M8	M10	M12
L5		19	22.5	24.5	28	33	36.5
L6	min	13	13	13	20.5		
	max			23	56.5	53	53

TQ 160 2

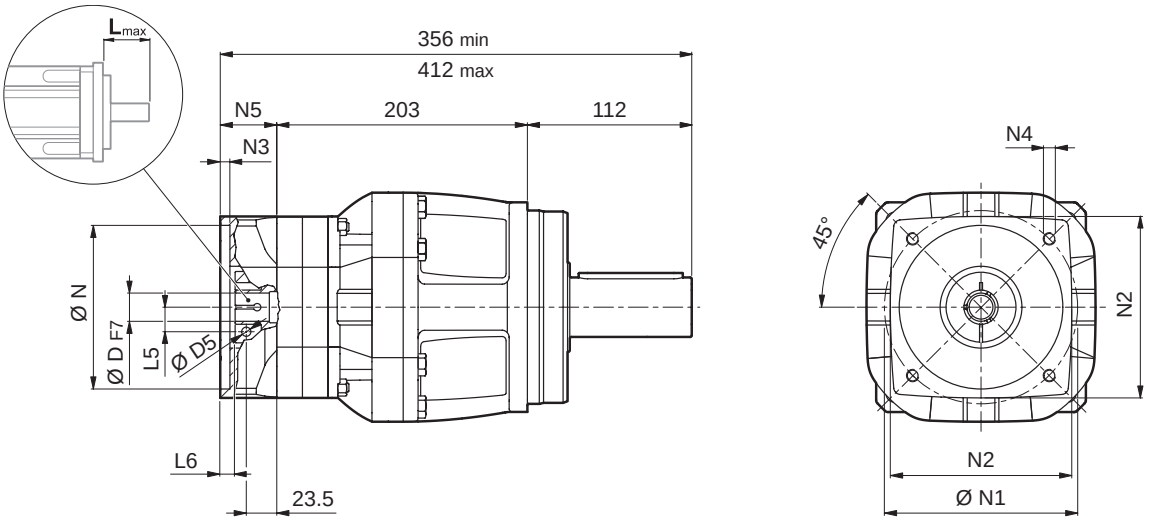

Kg	37.4

		D					
		19	**24**	**28**	**32**	**38**	**42**
D5		M6	M6	M8	M8	M8	M10
L5		16.5	19	22.5	24.5	28	33
L6	min	10	8.5	8.5	8.5		
	max				28.5	26	58.5

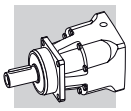

TQ 160 1														
	D							N	N1	N2	N3	N4	N5	L_{max}
95A2	–	24	28	–	–	–	–	95	115	158	6.5	M8x20	50	60
110A2	–	24	–	–	–	–	–	110	130	158	6.5	M8x20	50	60
130A1	–	24	28	32	–	–	–	130	165	158	6.5	M10x20	50	60
180A	–	24	28	–	–	–	–	180	215	203	6.5	M14x28	50	60
180A1	–	–	–	32	38	–	–	180	215	205	6.5	M14x28	60	80
200A	–	–	–	–	–	42	–	200	235	220	6.5	M14x28	96	110
230A	–	–	–	–	38	42	48	230	265	240	6.5	M14x28	96	110

TQ 160 2														
	D							N	N1	N2	N3	N4	N5	L_{max}
80A3	19	–	–	–	–	–	–	80	100	130	6.5	M6x14	41	60
95A2	19	24	28	–	–	–	–	95	115	130	6.5	M8x18	41	60
110A2	–	24	–	–	–	–	–	110	130	130	6.5	M8x20	41	60
110B1	19	–	28	–	–	–	–	110	145	130	6.5	M8x20	41	60
130A1	–	24	28	32	–	–	–	130	165	154	6.5	M10x20	41	60
180A	–	24	28	–	–	–	–	180	215	190	6.5	M14x28	41	60
180A1	–	–	–	32	38	–	–	180	215	190	6.5	M14x28	61	80
200A	–	–	–	–	–	42	–	200	235	210	6.5	M14x28	97	110

For FM version contact us for overall dimensions.

Please contact us for other motor adapters and input shaft bore!

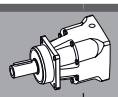 i	$M_{n\,2}$ [Nm]	$M_{a\,2}$ [Nm]	$M_{p\,2}$ [Nm]	n_1 [min-1]	$n_{1\,max}$ [min-1]	φ_S ≤ [arcmin]	φ_R ≤ [arcmin]	C_t [Nm/arcmin]	$R_{2\,max}$ [N]	$A_{2\,max}$ [N]	η %	J_G [kgcm²] D 19	24	28	32	38	42	48
TQ 160 1_3	530	800	1500	1500	3500	3'	2'	170	15000	13000	97	–	29.19	29.58	29.63	29.99	32.89	45.99
TQ 160 1_4	800	1200	2000	1500	3500	3'	2'	170	15000	13000	97	–	17.64	18.03	18.08	18.44	21.33	34.44
TQ 160 1_5	800	1200	2000	1800	3500	3'	2'	170	15000	13000	97	–	11.36	11.76	11.81	12.17	15.06	28.17
TQ 160 1_7	750	1150	2000	2500	3500	3'	2'	170	15000	13000	97	–	8.88	9.27	9.32	9.68	12.58	25.68
TQ 160 1_10	550	850	1600	2500	3500	3'	2'	170	15000	13000	97	–	6.66	7.05	7.10	7.46	10.35	23.46
TQ 160 2_16	800	1200	2000	2800	3500	5'	3'	170	15000	13000	94	6.52	6.67	7.05	7.13	7.77	13.77	–
TQ 160 2_20	800	1200	2000	2800	3500	5'	3'	170	15000	13000	94	6.16	6.31	6.69	6.77	7.41	13.41	–
TQ 160 2_25	800	1200	2000	2800	3500	5'	3'	170	15000	13000	94	4.81	4.96	5.34	5.42	6.06	12.06	–
TQ 160 2_28	800	1200	2000	2800	3500	5'	3'	170	15000	13000	94	3.77	3.92	4.30	4.38	5.02	11.02	–
TQ 160 2_35	800	1200	2000	2800	3500	5'	3'	170	15000	13000	94	3.65	3.80	4.18	4.26	4.90	10.90	–
TQ 160 2_40	800	1200	2000	2800	3500	5'	3'	170	15000	13000	94	3.05	3.19	3.57	3.65	4.30	10.30	–
TQ 160 2_50	800	1200	2000	2800	3500	5'	3'	170	15000	13000	94	2.99	3.13	3.52	3.60	4.24	10.24	–
TQ 160 2_70	750	1150	2000	3000	3500	5'	3'	170	15000	13000	94	2.97	3.11	3.50	3.58	4.22	10.22	–
TQ 160 2_100	550	850	1600	3000	3500	5'	3'	170	15000	13000	94	2.95	3.09	3.48	3.56	4.20	10.20	–

INDEX OF REVISIONS (R)

TI_CAT_TQ_STD_ENG_R01_0	
	Description
4, 5	Sect 1.2 “Selecting the gear unit”: - Updated cycle factor (f_z)values - Updated temperature adjusting factor (f_T) calculation - Updated speed constant values (K_n) - Modified gearbox selection method
6, 7	Sect 1.3 “Service life of bearings”: - Updated table with SB and HB values - Updated bearings calculation method
8	Sect. 2 “Features of TQ series”: - Updated output shaft diagram with SB and HB values
9	Sect. 3 “Ordering code”: - Introduced option low backlasch - Introduced option FM - Introduced option SB and HB
10 ... 19	Sect. 4 “Dimensions and technical specifications”: - Updated motor adapter name and dimensions - Updated performances values

TECHNOGEAR

"…TQ features the highest performance when it comes to

Torque, Robustness, Precision, and Accuracy –

This product range scores in every category..."

Best price / performance ratio

Higher Power Density

Markedly higher Torsionally Stiffness

Higher Acceleration and Nominal torques

Extremely Low Backlash less than 2 arcmin

Higher Radial and Axial loading capacities

Universal design allow any mounting orientation

Designed for Cyclic and Continuous Duty

Quiet running

IP65 Protection

TECHNOGEAR

Precision Planetary Gearing Products

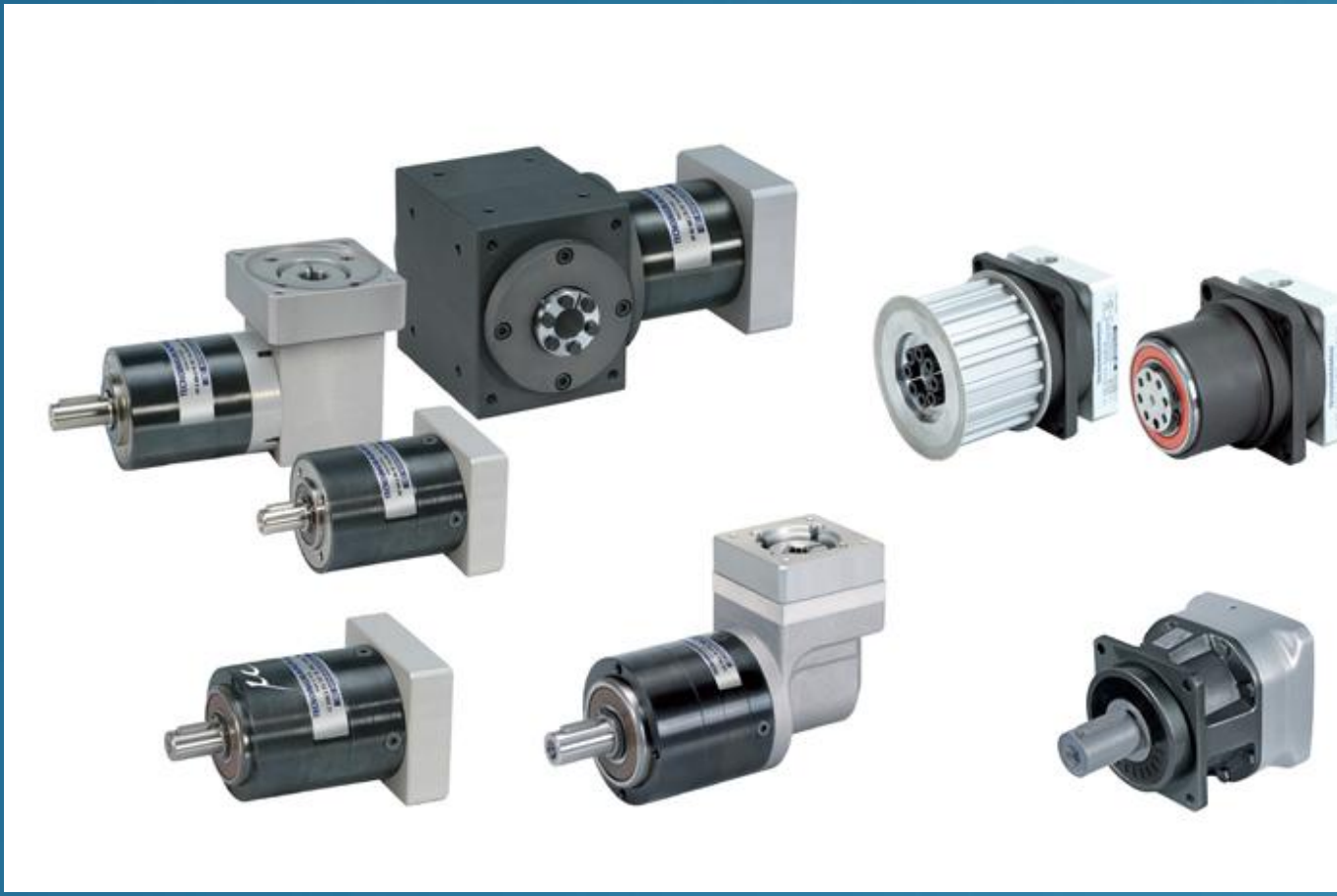

We have your gearing solution covered.

SIPCO Mechanical Linkage Solutions
strives for continual customer satisfaction
in the products and services we offer;
delivering excellence, reliability, and performance
you can count on..

CERTIFIED QUALITY MANAGEMENT SYSTEM ISO 9001:2008 DNV

SIPCO-MLS • 12610 Galveston Rd. • Webster, TX 77598 • (T) 281-480-8711 • (F) 281-480-8656